141.0	0002	0006.0	1 of 1	Residential
Map	Block	Lot	CARD	ARLINGTON

	Total Card	/	Total Parcel
APPRAISED:	720,700	/	720,700
USE VALUE:	720,700	/	720,700
ASSESSED:	720,700	/	720,700

PROPERTY LOCATION

No	Alt No	Direction/Street/City
94		MENOTOMY RD, ARLINGTON

OWNERSHIP

Unit #:

Owner 1:	COLES JOHN S & NINA BALDWIN
Owner 2:	TRS/ JOHN S COLES TRUST &
Owner 3:	NINA BALDWIN COLES TRUST
Street 1:	94 MENOTOMY RD
Street 2:	
Twn/City:	ARLINGTON
St/Prov:	MA Cntry: Own Occ: Y
Postal:	02476 Type:

PREVIOUS OWNER

Owner 1:	COLES JOHN S--ETAL -
Owner 2:	COLES NINA BALDWIN -
Street 1:	94 MENOTOMY RD
Twn/City:	ARLINGTON
St/Prov:	MA Cntry:
Postal:	02476

NARRATIVE DESCRIPTION

This parcel contains 4,338 Sq. Ft. of land mainly classified as One Family with a Old Style Building built about 1926, having primarily Vinyl Exterior and 2361 Square Feet, with 1 Unit, 1 Bath, 0 3/4 Bath, 1 HalfBath, 9 Rooms, and 4 Bdrms.

OTHER ASSESSMENTS

Code	Descrip/No	Amount	Com. Int

PROPERTY FACTORS

Item	Code	Description	%	Item	Code	Description
Z	R1	SINGLE FA	100	water		
o				Sewer		
n				Electri		
Census:				Exmpt		
Flood Haz:						
D				Topo	2	Above Stree
s				Street		
t				Gas:		

IN PROCESS APPRAISAL SUMMARY

Use Code	Land Size	Building Value	Yard Items	Land Value	Total Value
101	4338.000	334,700	900	385,100	720,700
Total Card	0.100	334,700	900	385,100	720,700
Total Parcel	0.100	334,700	900	385,100	720,700

Source: Market Adj Cost | Total Value per SQ unit /Card: 305.25 | /Parcel: 305.2

Legal Description

User Acct	GIS Ref	GIS Ref	Insp Date
90467			04/24/18

Entered Lot Size
Total Land:
Land Unit Type:

Patriot Properties Inc.

PREVIOUS ASSESSMENT

Parcel ID 141.0-0002-0006.0

!10873!

Tax Yr	Use	Cat	Bldg Value	Yrd Items	Land Size	Land Value	Total Value	Asses'd Value	Notes	Date
2020	101	FV	334,700	900	4,338.	385,100	720,700	720,700	Year End Roll	12/18/2019
2019	101	FV	261,300	900	4,338.	385,100	647,300	647,300	Year End Roll	1/3/2019
2018	101	FV	261,300	900	4,338.	341,100	603,300	603,300	Year End Roll	12/20/2017
2017	101	FV	261,300	900	4,338.	286,100	548,300	548,300	Year End Roll	1/3/2017
2016	101	FV	261,300	900	4,338.	286,100	548,300	548,300	Year End	1/4/2016
2015	101	FV	246,500	900	4,338.	247,600	495,000	495,000	Year End Roll	12/11/2014
2014	101	FV	246,500	900	4,338.	239,300	486,700	486,700	Year End Roll	12/16/2013
2013	101	FV	246,500	900	4,338.	227,800	475,200	475,200		12/13/2012

PRINT

Date	Time
12/11/20	01:07:05

LAST REV

Date	Time
05/14/18	12:11:28

apro

USER DEFINED

Prior Id # 1:	90467
Prior Id # 2:	
Prior Id # 3:	
Prior Id # 1:	
Prior Id # 2:	
Prior Id # 3:	
Prior Id # 1:	
Prior Id # 2:	
Prior Id # 3:	
ASR Map:	
Fact Dist:	
Reval Dist:	
Year:	
LandReason:	
BldReason:	
CivilDistrict:	
Ratio:	

SALES INFORMATION

TAX DISTRICT

PAT ACCT. 10873

Grantor	Legal Ref	Type	Date	Sale Code	Sale Price	V	Tst	Verif	Notes
COLES JOHN S--E	1505-35		3/13/2017	Convenience	1	No	No		
	1051-130		11/1/1988		223,000	No	No		Y

BUILDING PERMITS

Date	Number	Descrip	Amount	C/O	Last Visit	Fed Code	F. Descrip	Comment
11/20/1998	805	Manual	7,000					REROOF

ACTIVITY INFORMATION

Date	Result	By	Name
4/24/2018	Meas/Inspect	CC	Chris C
2/2/2009	Meas/Inspect	345	PATRIOT
4/26/2000	Inspected	263	PATRIOT
12/9/1999	Mailer Sent		
11/16/1999	Entry Denied	243	PATRIOT
4/1/1992		PM	Peter M

Sign: VERIFICATION OF VISIT NOT DATA ___/___/___

LAND SECTION (First 7 lines only)

Use Code	Description	LUC Fact	No of Units	Depth / PriceUnits	Unit Type	Land Type	LT Factor	Base Value	Unit Price	Adj	Neigh	Neigh Influ	Neigh Mod	Infl 1	%	Infl 2	%	Infl 3	%	Appraised Value	Alt Class	%	Spec Land	J Code	Fact	Use Value	Notes
101	One Family		4338		Sq. Ft.	Site		0	70.	1.27	8									385,099						385,100	

Total AC/HA:	0.09959	Total SF/SM:	4338	Parcel LUC:	101	One Family	Prime NB Desc:	ARLINGTON	Total:	385,099	Spl Credit		Total:	385,100

EXTERIOR INFORMATION

Type:	15 - Old Style
Sty Ht:	2H - 2 & 1/2 Sty
(Liv) Units:	1 Total: 1
Foundation:	2 - Conc. Block
Frame:	1 - Wood
Prime Wall:	4 - Vinyl
Sec Wall:	%
Roof Struct:	1 - Gable
Roof Cover:	1 - Asphalt Shgl
Color:	WHITE
View / Desir:	

GENERAL INFORMATION

Grade:	C - Average		
Year Blt:	1926	Eff Yr Blt:	
Alt LUC:		Alt %:	
Jurisdict:		Fact:	.
Const Mod:			
Lump Sum Adj:			

INTERIOR INFORMATION

Avg Ht/FL:	STD		
Prim Int Wall	2 - Plaster		
Sec Int Wall:	%		
Partition:	T - Typical		
Prim Floors:	3 - Hardwood		
Sec Floors:	%		
Bsmnt Flr:	12 - Concrete		
Subfloor:			
Bsmnt Gar:	1		
Electric:	3 - Typical		
Insulation:	2 - Typical		
Int vs Ext:	S		
Heat Fuel:	2 - Gas		
Heat Type:	5 - Steam		
# Heat Sys:	1		
% Heated:	100	% AC:	
Solar HW:	NO	Central Vac:	NO
% Com Wall		% Sprinkled:	

BATH FEATURES

Full Bath	1	Rating:	Average
A Bath:		Rating:	
3/4 Bath:		Rating:	
A 3QBth		Rating:	
1/2 Bath:	1	Rating:	Average
A HBth:		Rating:	
OthrFix:		Rating:	

OTHER FEATURES

Kits:	1	Rating:	Average
A Kits:		Rating:	
Frpl:	1	Rating:	Average
WSFlue:		Rating:	

CONDO INFORMATION

Location:	
Total Units:	
Floor:	
% Own:	
Name:	

DEPRECIATION

Phys Cond:	AG - Avg-Good	26.	%
Functional:			%
Economic:			%
Special:			%
Override:			%
Total:		26.4	%

CALC SUMMARY

Basic $ / SQ:	130.00
Size Adj.:	1.09472680
Const Adj.:	0.98000199
Adj $ / SQ:	139.468
Other Features:	78500
Grade Factor:	1.00
NBHD Inf:	1.00000000
NBHD Mod:	
LUC Factor:	1.00
Adj Total:	454702
Depreciation:	120041
Depreciated Total:	334661

COMMENTS

HST FAIR.

RESIDENTIAL GRID

1st Res Grid	Desc:	Line 1	# Units:	1

Level	FY	LR	DR	D	K	FR	RR	BR	FB	HB	L	O
Other												
Upper												
Lvl 2												
Lvl 1												
Lower												
Totals	RMs: 9		BRs: 4			Baths: 1				HB 1		

REMODELING

Exterior:	
Interior:	
Additions:	
Kitchen:	
Baths:	
Plumbing:	
Electric:	
Heating:	
General:	

RES BREAKDOWN

No Unit	RMS	BRS	FL
1	9	4	M
Totals			
1	9	4	

COMPARABLE SALES

Rate	Parcel ID	Typ	Date	Sale Price

WtAv$/SQ:		AvRate:	Ind.Val

Juris. Factor:		Before Depr:	139.47
Special Features:	0	Val/Su Net:	97.18
Final Total:	334700	Val/Su SzAd	141.76

SKETCH

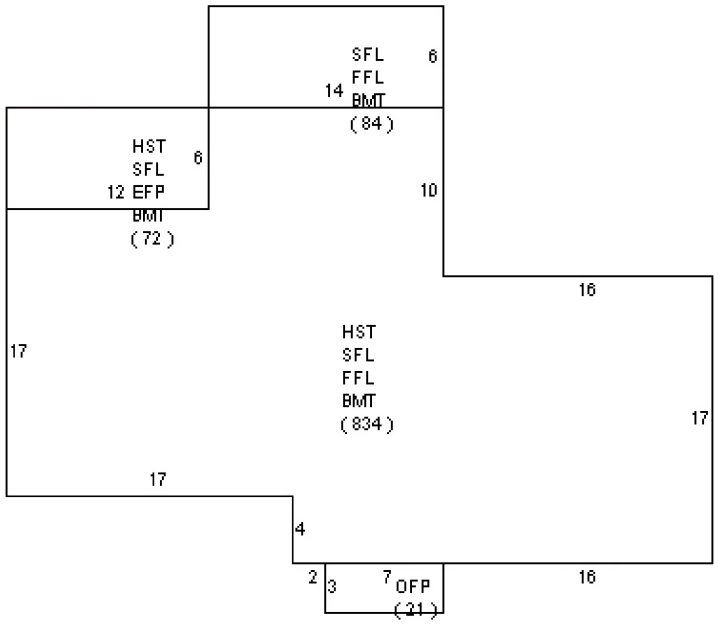

SUB AREA

Code	Description	Area - SQ	Rate - AV	Undepr Value
BMT	Basement	990	41.840	41,422
SFL	Second Floor	990	139.470	138,074
FFL	First Floor	918	139.470	128,032
HST	Half Story	453	139.470	63,179
EFP	Enclos Porch	72	63.740	4,589
OFP	Open Porch	21	43.120	906

Net Sketched Area:	3,444			Total:	376,202
Size Ad	2361	Gross Are	3897	FinArea	2361

SUB AREA DETAIL

Sub Area	% Usbl	Descrip	% Type	Qu	# Ten

IMAGE

AssessPro Patriot Properties, Inc

MOBILE HOME

Make:		Model:		Serial #:		Year:	Color:

SPEC FEATURES/YARD ITEMS

PARCEL ID 141.0-0002-0006.0

Code	Description	A	Y/S	Qty	Size/Dim	Qual	Con	Year	Unit Price	D/S	Dep	LUC	Fact	NB Fa	Appr Value	JCod	JFact	Juris. Value
19	Patio	D	Y	1	20X20	A	AV	1980	3.19	T	31.2	101			900			900

More: N	Total Yard Items:	900	Total Special Featues:		Total: 900